NOTES:
1. MINIMUM HORIZONTAL MOUNTING PATTERN 3.937"[100mm].
2. MAXIMUM HORIZONTAL MOUNTING PATTERN, WITHOUT SWITCHING KNOB, 15.75"[400mm].
3. MAX HORIZONTAL MOUNTING PATTERN, WITH SWITCHING KNOB, 18.10"[460mm].
4. FOR RECESSED APPLICATIONS, MINIMUM VERTICAL LIFT FOR HOOK ENGAGEMENT IS .58"[14.7mm].
5. OVERALL MOUNT DEPTH AT 0° OF TILT IS 2.40"[61mm].
6. MAXIMUM VERTICAL MOUNTING PATTERN IS 23.6"[600mm].

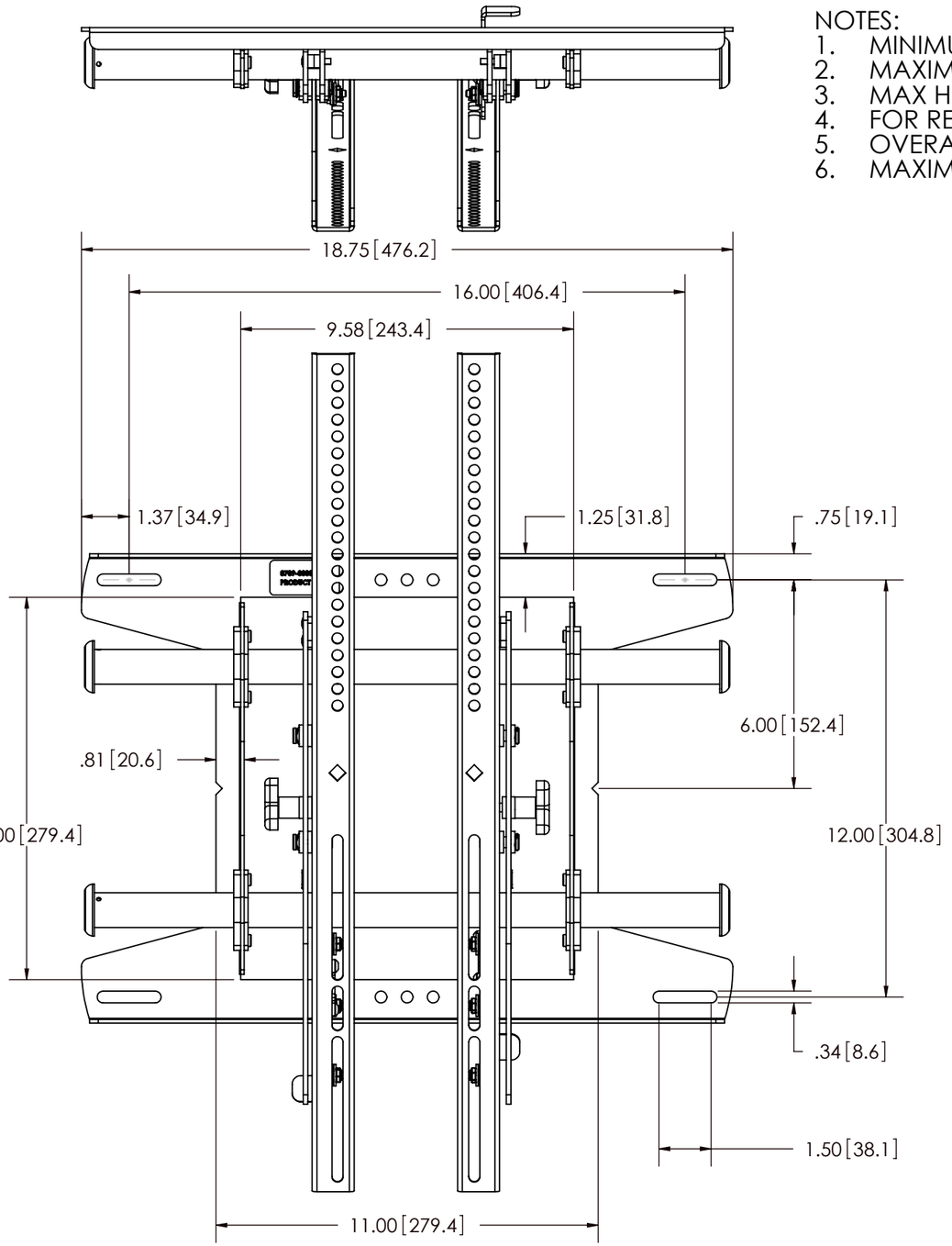

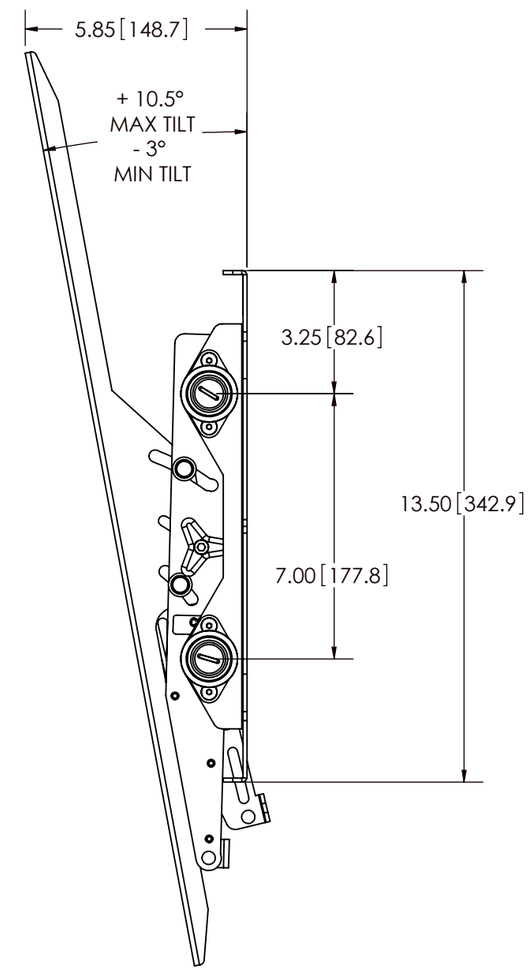

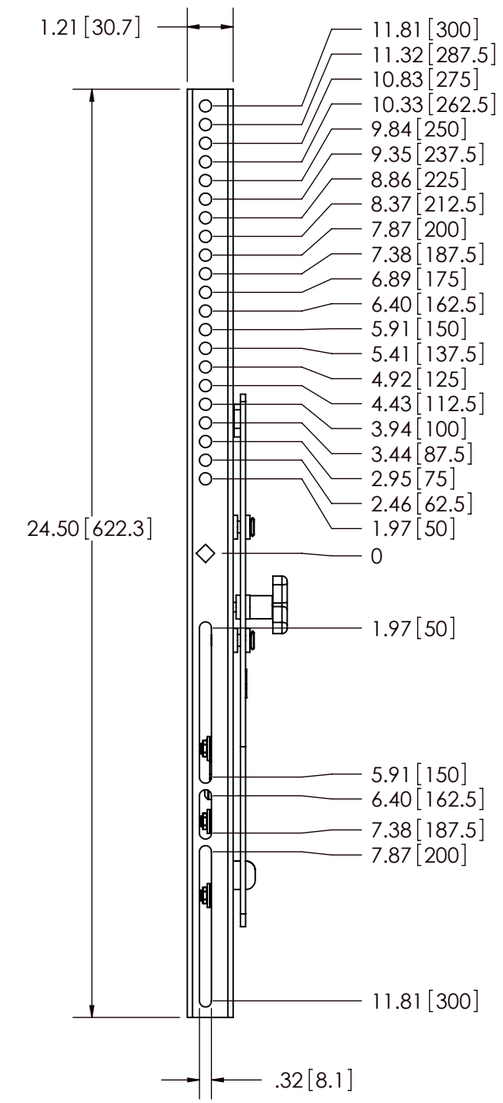

CHIEF MANUFACTURING INC.
PRODUCT ORDER NUMBER IS: MTAPU
PHONE: 1-800-582-6480

SHEET SCALE = 1:4

THE INFORMATION AND DESIGNS CONTAINED IN THIS DRAWING ARE CONFIDENTIAL AND THE PROPRIETARY PROPERTY OF MILESTONE AV TECHNOLOGIES NEITHER THIS DESIGN NOR ANY INFORMATION CONTAINED IN THIS DRAWING MAY BE REPRODUCED OR DISCLOSED TO OTHERS WITHOUT THE EXPRESS WRITTEN CONSENT OF MILESTONE AV TECHNOLOGIES.

CHIEF
8401 EAGLE CREEK PKY
SUITE #700
SAVAGE, MN 55378
PHONE: 952-894-6280
FAX: 877-894-6918

TITLE
CUSTOMER PRINT
MTAPU

SIZE B | DWG. NO. MTAPU

MTAPU